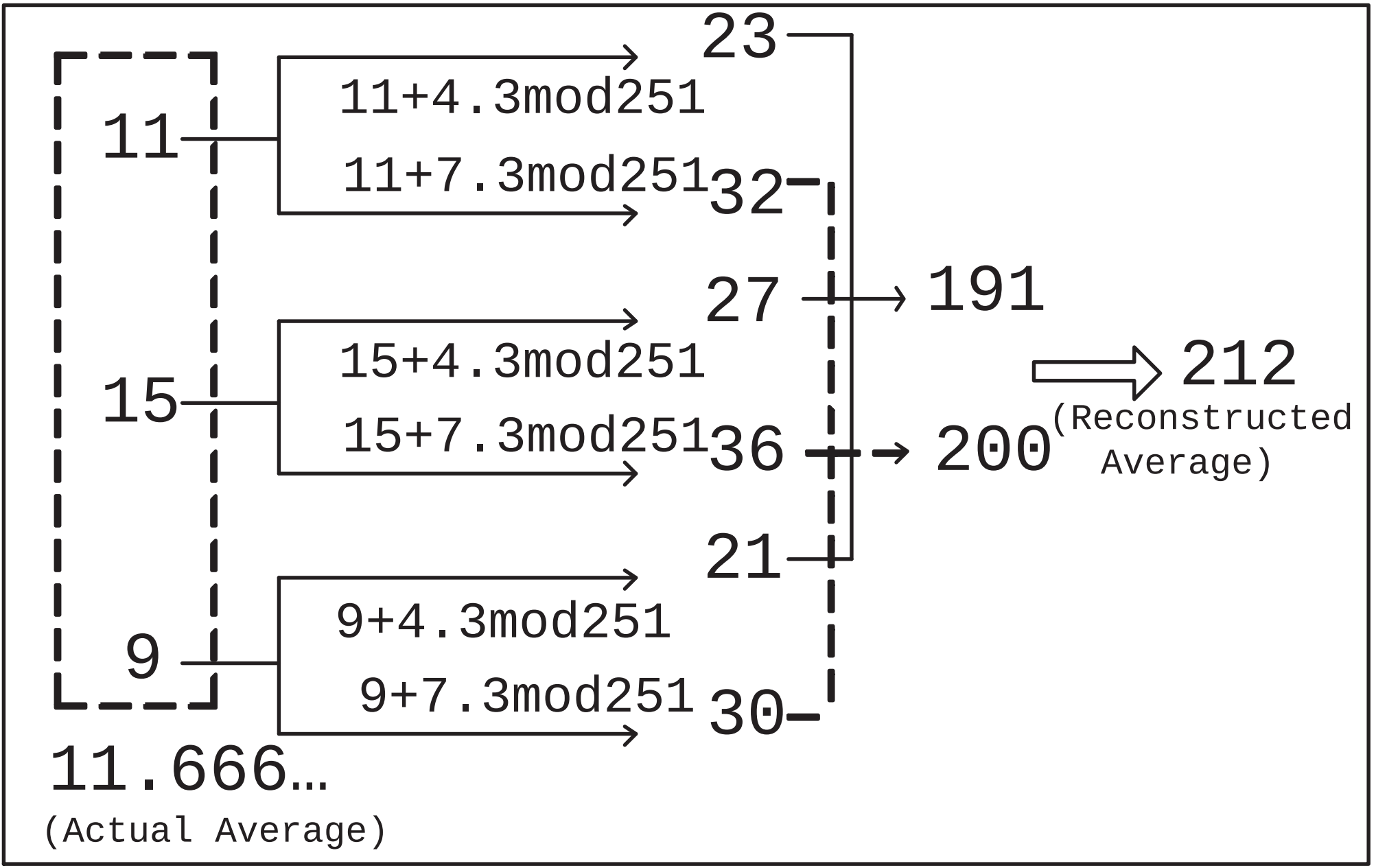
11
15
9
11+4.3mod251
11+7.3mod251
15+4.3mod251
15+7.3mod251
9+4.3mod251
9+7.3mod251
23
32
27
36
21
30
191
200
212
(Reconstructed Average)
11.666…
(Actual Average)